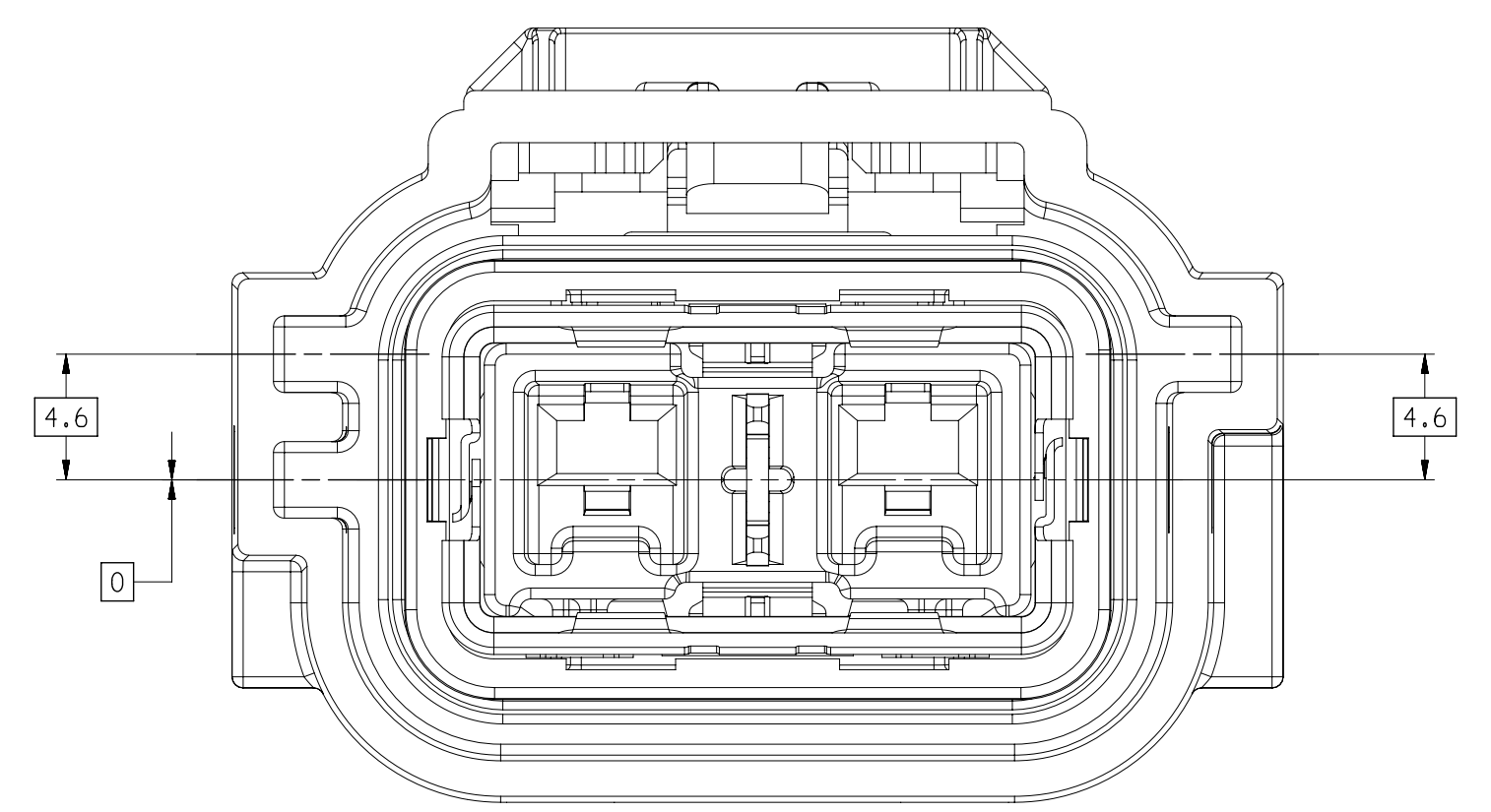

TYPE 102
SAME AS TYPE 101
EXCEPT AS SHOWN

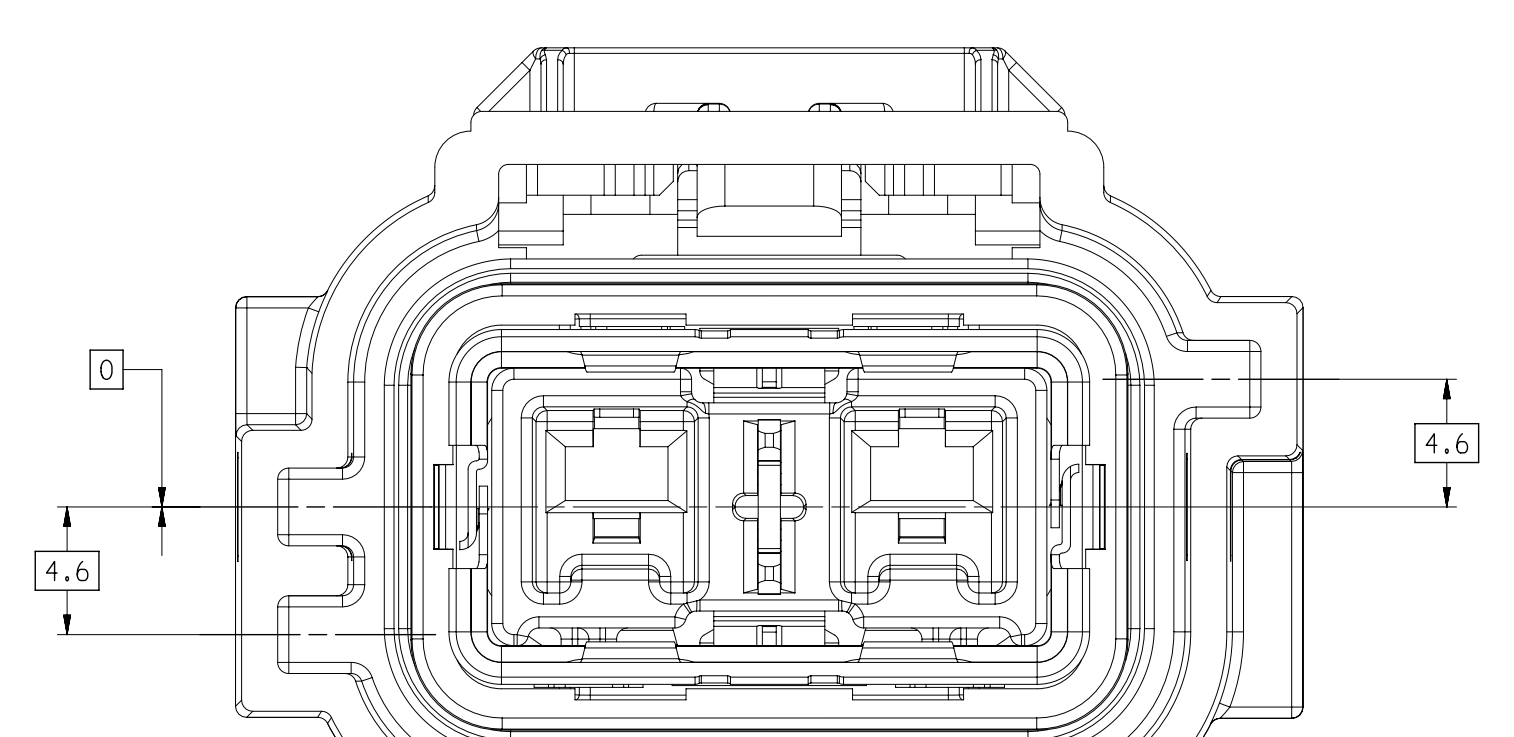

TYPE 103
SAME AS TYPE 101
EXCEPT AS SHOWN

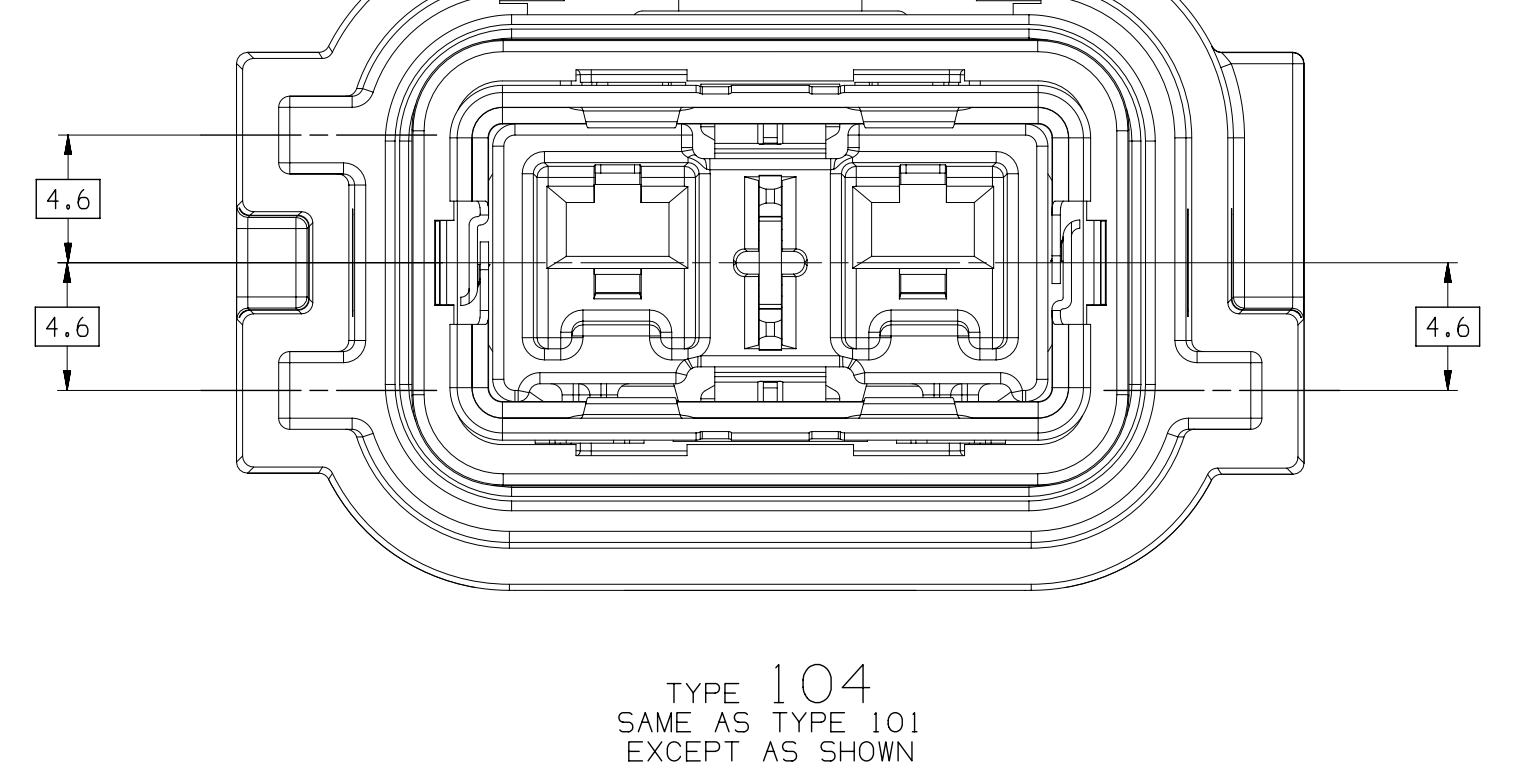

TYPE 104
SAME AS TYPE 101
EXCEPT AS SHOWN

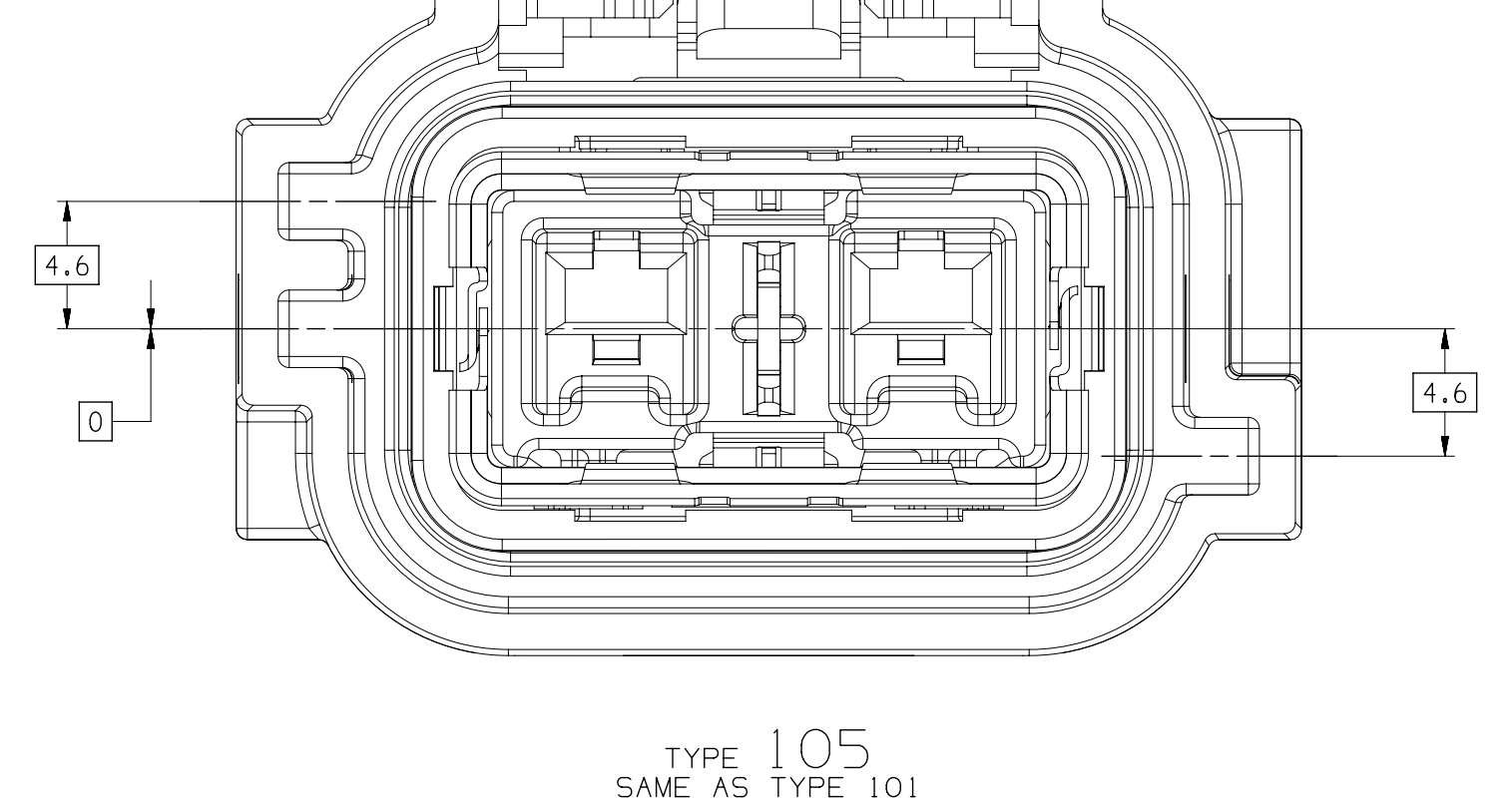

TYPE 105
SAME AS TYPE 101
EXCEPT AS SHOWN

ADDITIONAL ASSEMBLY INFORMATION REFERENCE ONLY

INNER CONNECTOR AND SHUNT SUBASSEMBLY

INNER CONNECTOR AND SHUNT SHALL BE ASSEMBLED
AS INDICATED BEFORE INSERTION INTO OUTER HOUSING ASSEMBLY.

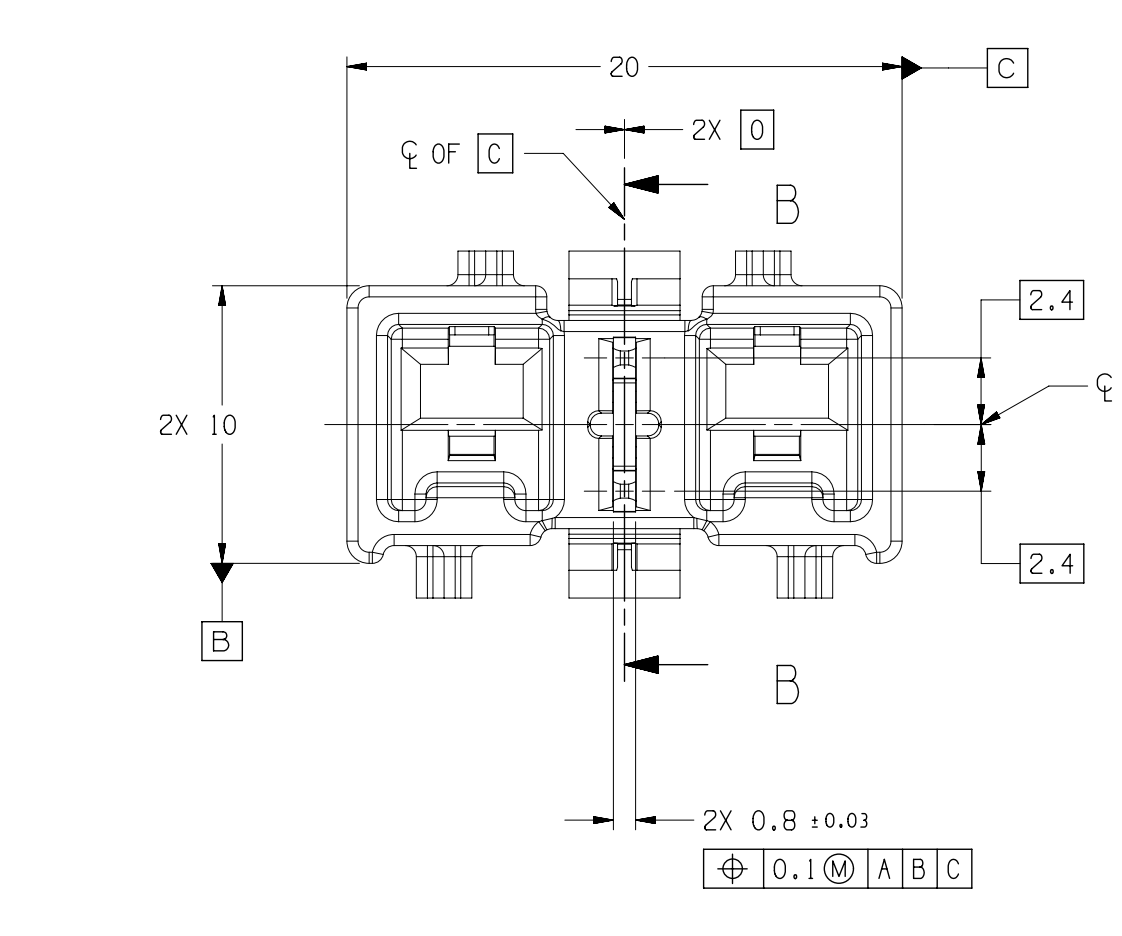
20
C
℄ OF C
2X 0
B
2.4
℄ OF B
2.4
2X 10
B
B
2X 0.8 ±0.03
⊕ 0.1Ⓜ A B C

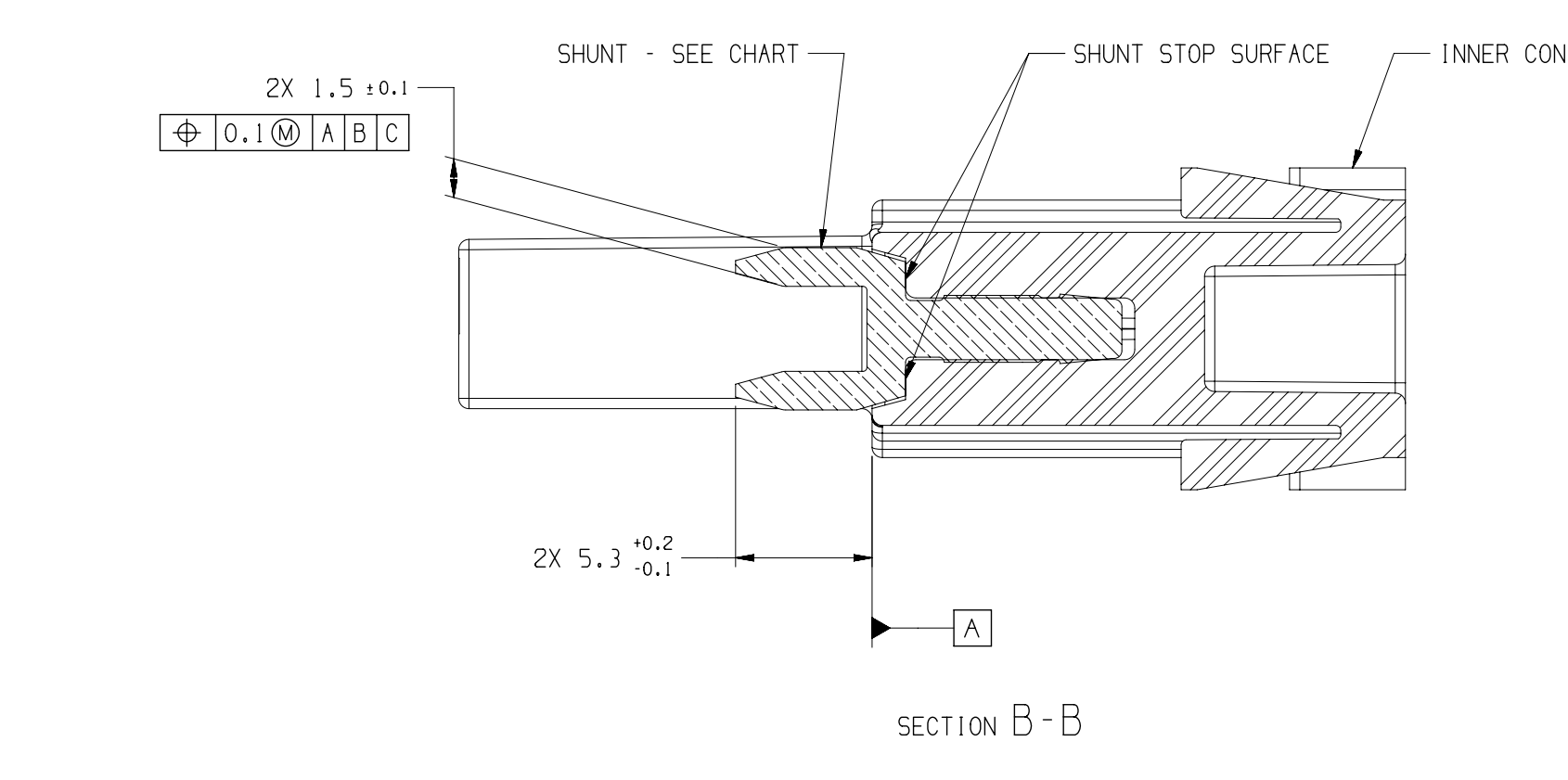
SHUNT - SEE CHART
SHUNT STOP SURFACE
INNER CONNECTOR - SEE CHART
2X 1.5 ±0.1
⊕ 0.1Ⓜ A B C
2X 5.3 +0.2 -0.1
A

SECTION B-B

ADDITIONAL ASSEMBLY INFORMATION REFERENCE ONLY
SEE SHEET 2 FOR CABLE ASSEMBLY INFORMATION

DRAWING NUMBER						
33353420						
SIZE	SCALE	FRAME NO	SHEET NO	STG	REV	N/P
A1x5	5:1	3 OF 3	1 OF 2	R	10	-

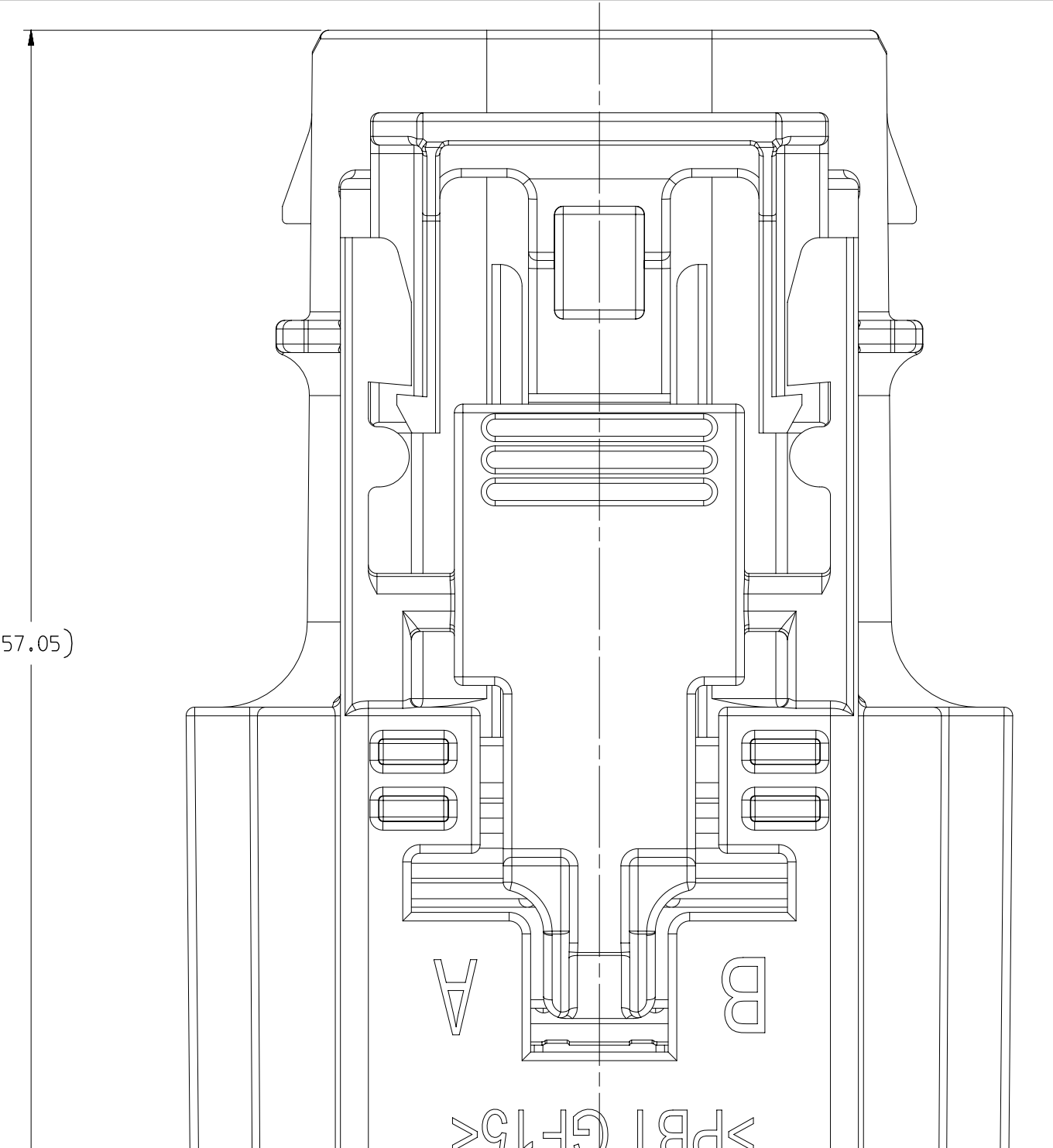
10
(57.05)
A
B
>PBT GF15<

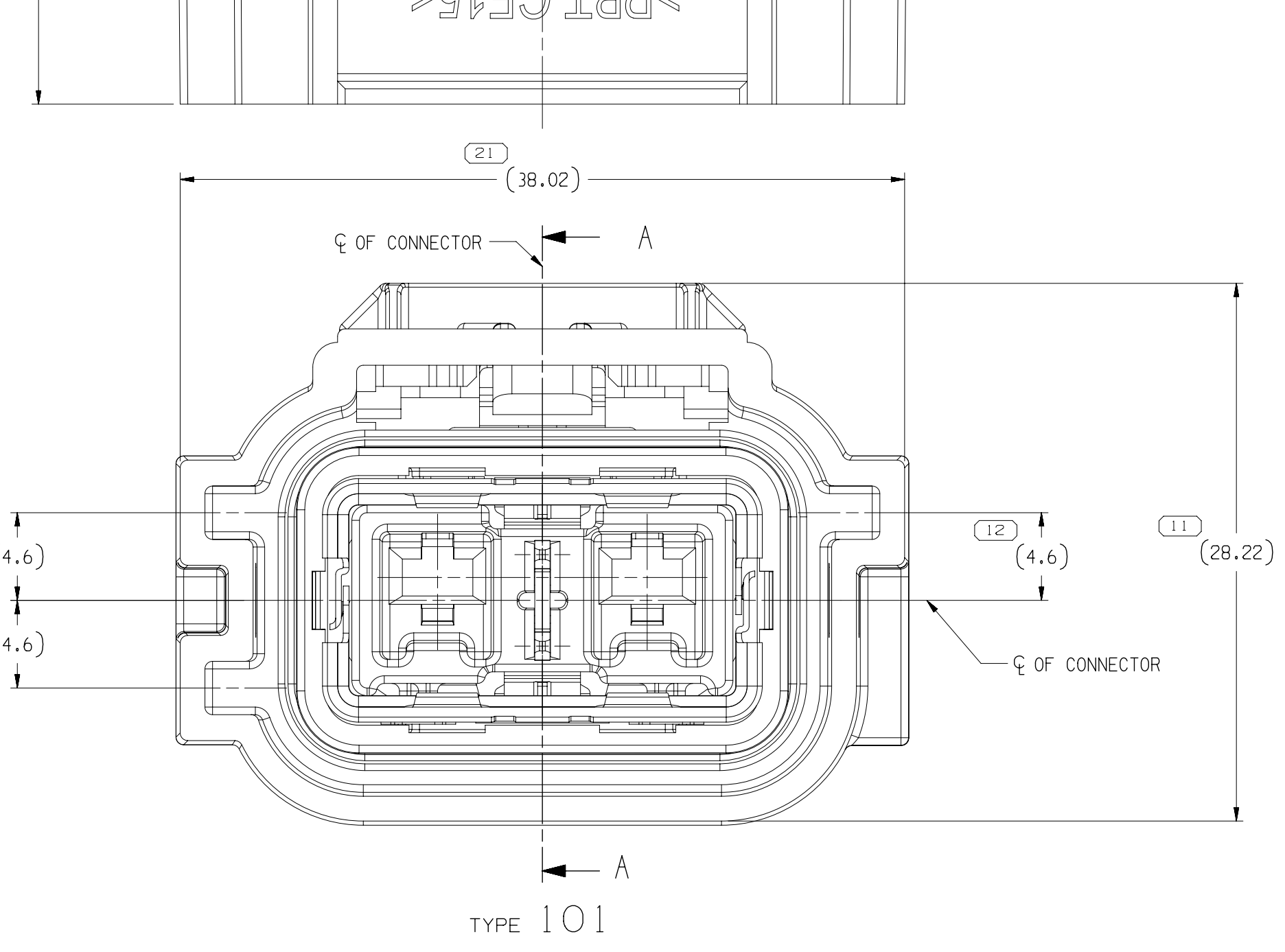
21
(38.02)
℄ OF CONNECTOR
A
18
(4.6)
17
(4.6)
12
(4.6)
11
(28.22)
℄ OF CONNECTOR
A

TYPE 101

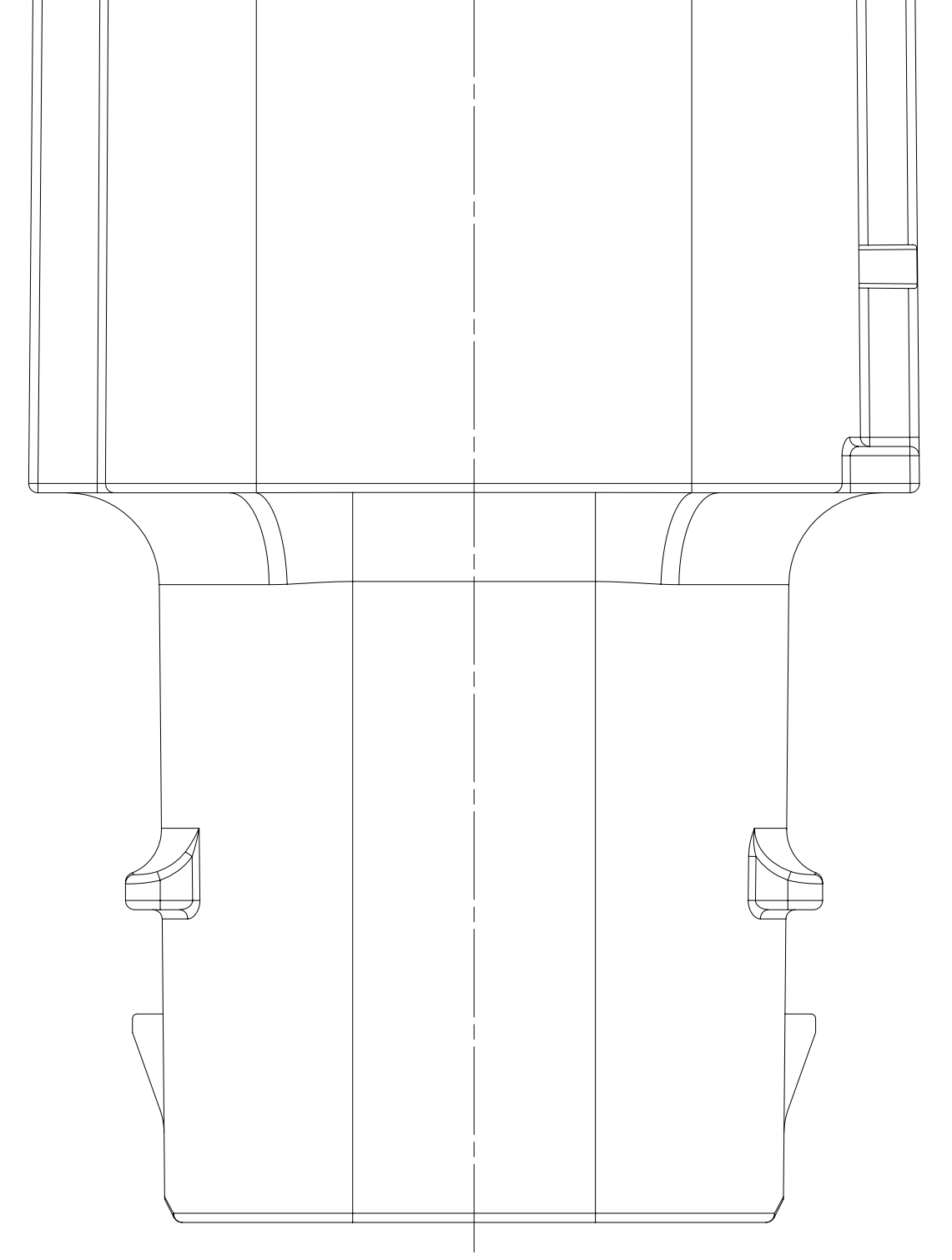

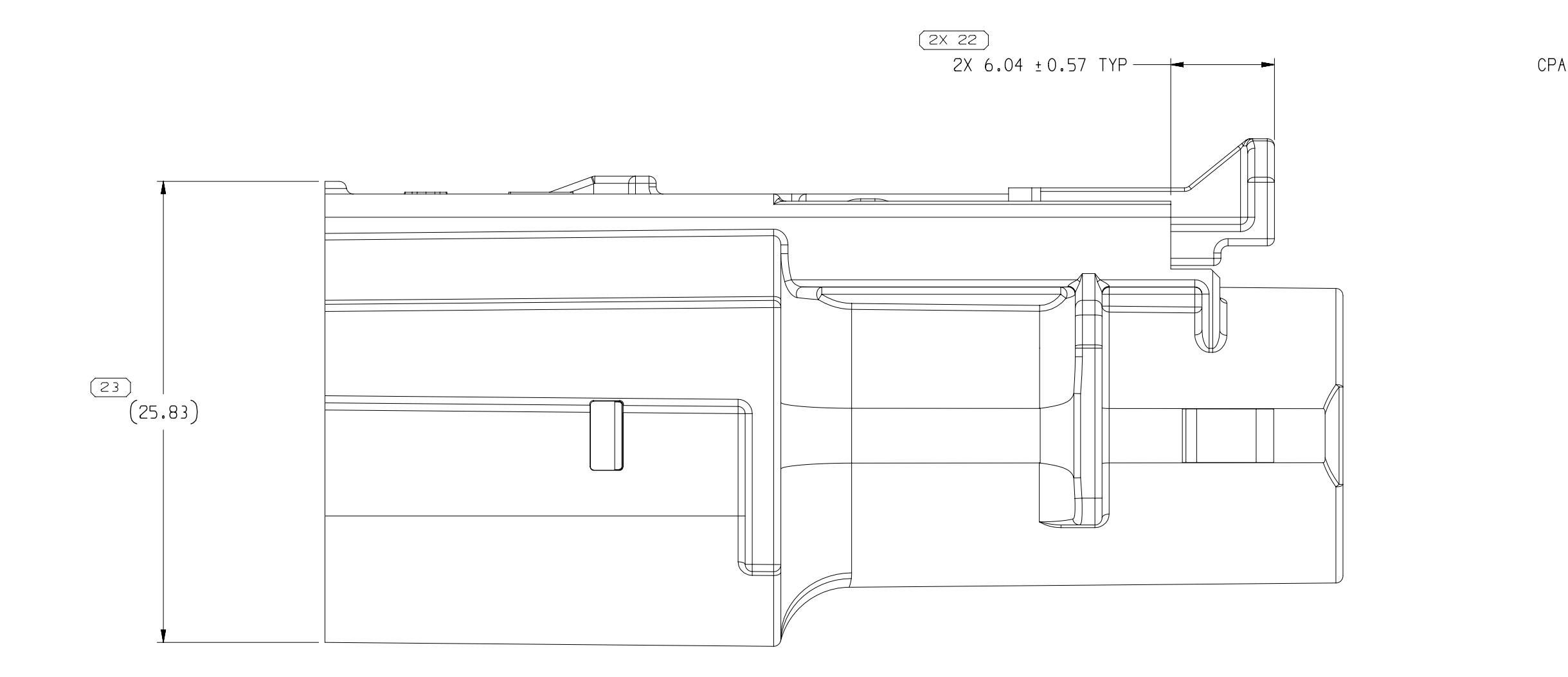
2X 22
2X 6.04 ±0.57 TYP
23
(25.83)

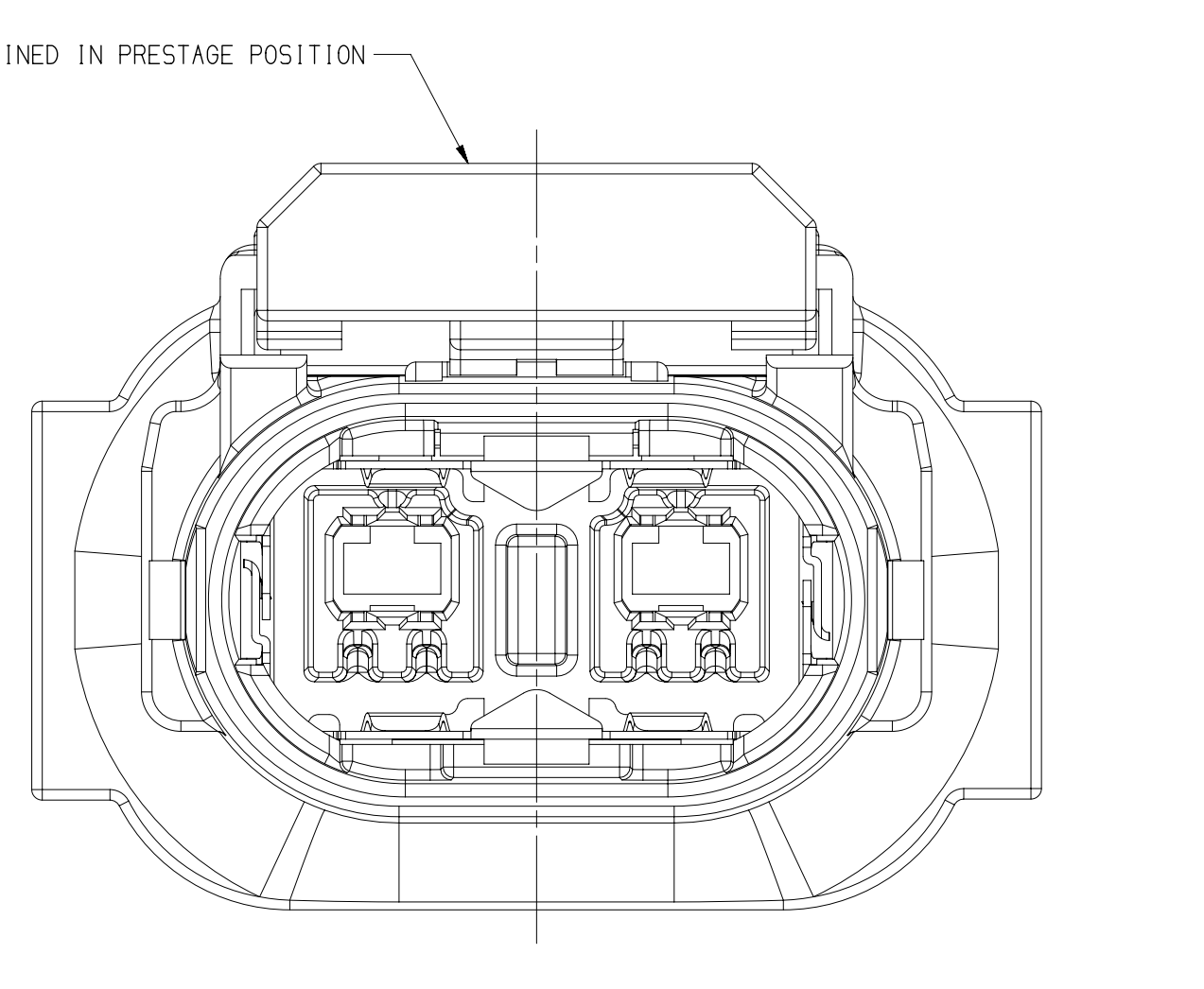
CPA MUST BE RETAINED IN PRESTAGE POSITION

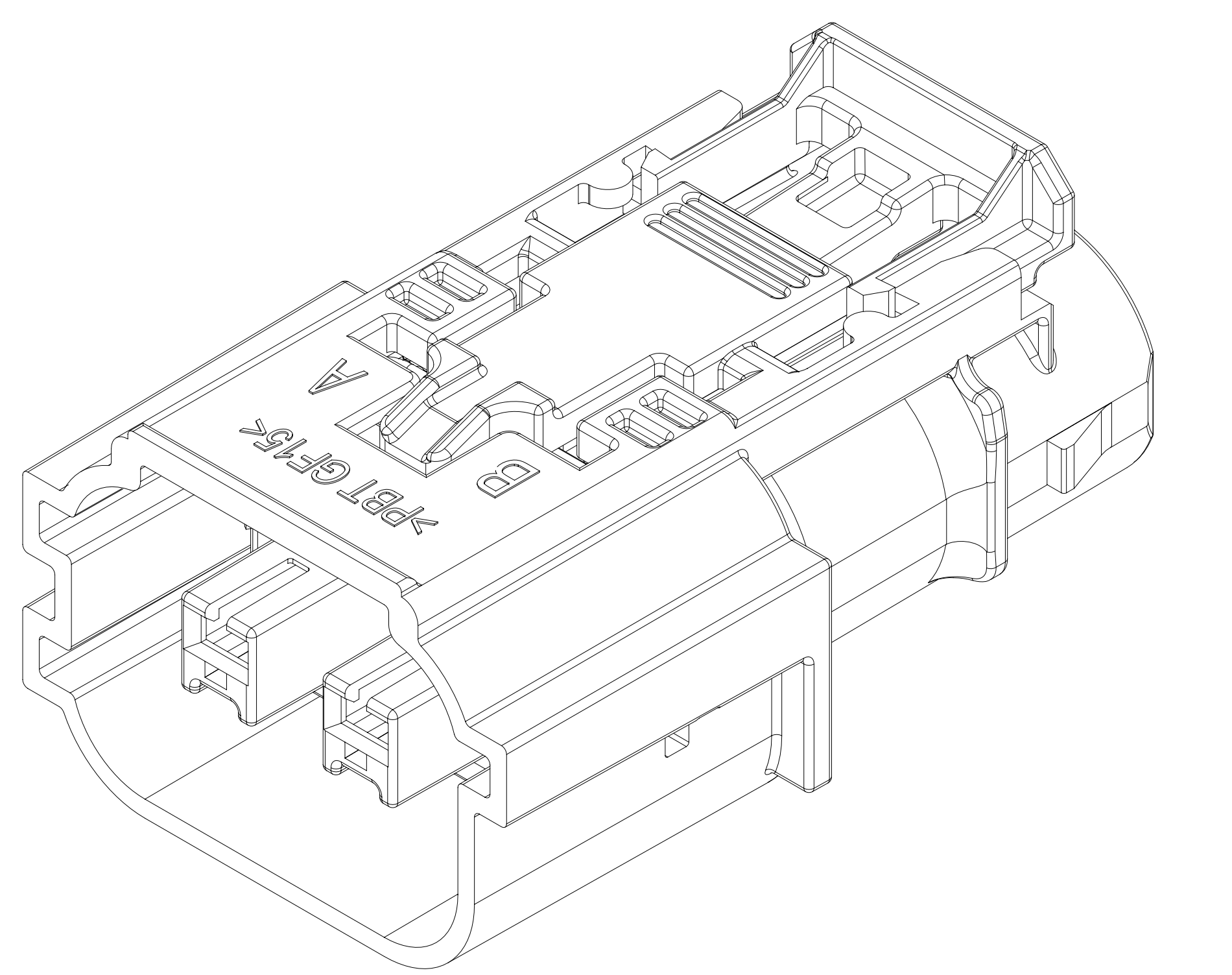

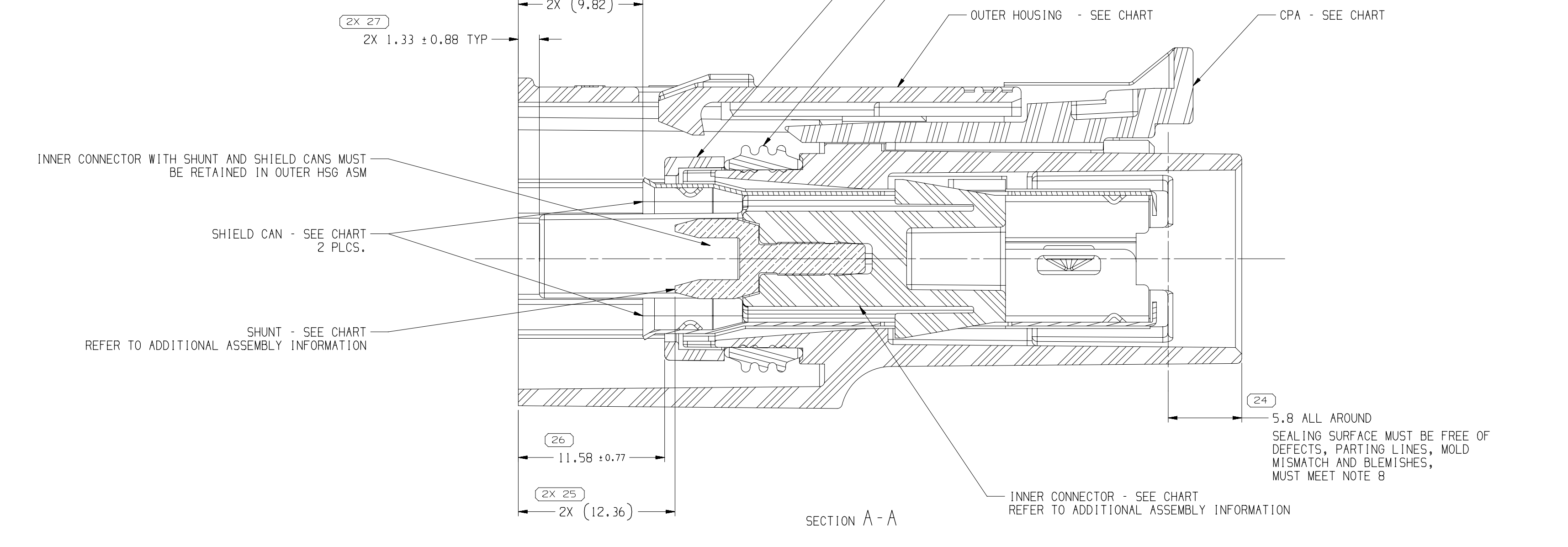
SEAL RETAINER- SEE CHART
SEAL - SEE CHART
OUTER HOUSING - SEE CHART
CPA - SEE CHART
2X 28
2X (9.82)
2X 27
2X 1.33 ±0.88 TYP
INNER CONNECTOR WITH SHUNT AND SHIELD CANS MUST BE RETAINED IN OUTER HSG ASM
SHIELD CAN - SEE CHART 2 PLCS.
SHUNT - SEE CHART REFER TO ADDITIONAL ASSEMBLY INFORMATION
24
5.8 ALL AROUND
SEALING SURFACE MUST BE FREE OF DEFECTS, PARTING LINES, MOLD MISMATCH AND BLEMISHES, MUST MEET NOTE 8
26
11.58 ±0.77
2X 25
2X (12.36)
INNER CONNECTOR - SEE CHART REFER TO ADDITIONAL ASSEMBLY INFORMATION

SECTION A-A

SYMBOL DEFINITION		
A DIMENSION WITHOUT AN INSPECTION REPORT SYMBOL ( ) DOES NOT REQUIRE INSPECTION. IT MAY BE CONTROLLED ON THE INDIVIDUAL COMPONENT DRAWING.	TOTAL NO OF INSPECTIONS REQUIRED	17
	LAST NO. USED	28

MISSING SYMBOLS
1-9 13-16 19-20

DWG STATUS					ZONE	REVISION HISTORY	AUTH	DR	APVD 1	APVD 2
DATE	STG	REV	N/P	CHG						
12MY16	R	01	-	-		TAXI PART DRAWING CREATED	433074	CM	CM	JN
08NO17	R	02	-	-		ALL PARTS; 35149967 SHIELD WAS 13737712 - 2 PLCS; REV LEVELS ADV TO 02	438343	CM	CM	JN
18DE17	R	03	-	-		ALL PARTS; ADDED DIM 24, DWG SHEET 2 & UPDATED NOTES; NO REV UPDATE REQ'D	438639	CM	CM	JN
26OC18	R	04	-	-		ALL PARTS - UPDATED NOTES #2 & 4 AND REMOVED "CONNECTION MEETS DIELECTRIC WITHSTAND VOLTAGE RATING" NOTE; 33339283 & 33353455 - UPDATED PART AVAILABILITY	440156	CGD	CGD	TAV
20NO18	R	05	-	-		ALL PARTS - ADDED "ASSEMBLY MANUAL", "APPLICATION DRAWINGS" NOTE AND UPDATED "ASEMMBLY VALIDATION" NOTE	441495	DAV	JAA	TAV
11JA19	R	06	-	-		ALL PARTS - UPDATED PDM ATTRIBUTES	442010	JLL	JAA	TAV
07FE19	R	07	-	-		ALL PARTS - UPDATED OUTER HOUSING TO THE LATEST REV AND NOTE #9	442085	CGD	CGD	TAV
28MY19	R	08	-	-		ALL PARTS - UPDATED PDM ATTRIBUTES	441703	AHG	AHG	TM
30SE19	R	09	-	-		33353456-58 - UPDATED PART AVAILABILITY	550114	JGO	JAA	TAV
18OC19	R	10	-	-		ALL PARTS - UPDATED INNER CONNECTOR TO THE LATEST REV	550276	CGD	CGD	TAV

NOTES

1. UNLESS OTHERWISE SPECIFIED AND/OR INDICATED:

   DIMENSIONS ARE TO FACE OF VIEW SHOWN AND AUTOMATICALLY ROUNDED BY COMPUTER FOR INSPECTION (SEE MATH MODEL FOR PRECISE DIMENSIONS). FOR ALL OTHER DIMENSIONS NOT SHOWN BUT REQUIRED FOR TOOL BUILD, SEE MATH MODEL FOR PRECISE TOOL PATH DATA.

2. THIS PRODUCT IS NOT CATEGORIZED AS AN APPEARANCE ITEM, MINOR IMPERFECTIONS INCLUDING, BUT NOT LIMITED TO, FLOW MARKS, COLOR BLEMISHES, GATE VESTIGE, AND SOFT FLASH THAT DO NOT AFFECT THE FIT, FORM, OR FUNCTION OF THE PART ARE PERMISSIBLE PER EANP_4-3_CS_01_EN.

3. ALL LEADS MUST BE HIPOT TESTED TO 3000 VOLTS (AC) FOR 10 SECONDS.

4. CONNECTION SYSTEM MEETS THE PERFORMANCE REQUIREMENTS OF SAE/USCAR-2 R5 NOVEMBER 2007, SAE/USCAR-37 AUGUST 2008 AND GMW-3191 DECEMBER 2007 FOR THE FOLLOWING CLASSIFICATIONS:

   TEMPERATURE CLASS 3 (-40° C TO 125° C
   VIBRATION CLASS 2 (ON ENGINE)
   SEALING CLASS 3 (SEALED PLUS HIGH PRESSURE SPRAY)
   MATING CLASS 1 (10 CYCLES)

5. HARNESS MANUFACTURER IS RESPONSIBLE FOR VALIDATING THE CONNECTION AS APPLIED ON CABLE TO THE REQUIREMENTS OF SPECIFIC APPLICATIONS.

6. FOR APPLICATION DATA SEE APPLICATION DRAWING.

7. SEALING VERIFICATION AND MARKING REQUIRED PER ES-A-755.

8. WIRING SUPPLIER MUST VERIFY AND COMPLETE CABLE ASSEMBLY VALIDATION, IN COORDINATION WITH CONNECTION SYSTEM SUPPLIER. THIS WOULD INCLUDE ENVIROMENTAL (SEALING) AND CRIMP VALIDATION STUDIES FOR SELECTED CABLE/TERMINAL/FERRULE COMBINATIONS.

9. CONNECTOR DESIGNS PROVIDE THE FOLLOWING MINIMUM CREEPAGE DISTANCES WHEN MATED, AS ASSESSED PER IEC60664 WITH POLUTION DEGREE : 2 OR 3:
   -CAVITIES A TO SHIELD OR B TO SHIELD : 12.7 mm
   -CAVITIES A TO B : 15.7 mm

10. ELECTRIC VEHICLE CHARGING AND OTHER HIGH DUTY CYCLE APPLICATIONS CARRYING >25A REQUIRE THE FOLLOWING:
    -MIN 5.0 MM2 COPPER CONDUCTORS.
    -TERMINAL TO CONDUCTOR INTERFACE RESISTANCES ≤0.2 mOhms. SOLDERED CRIMPS RECOMMENDED.
    -TERMINAL TEMPERATURES NEED TO BE MEASURED IN THE VEHICLE APPLICATION TO INSURE T-RISE OVER AMBIENT IS <35 DEG C AT MAXIMUM CONTINUOUS CURRENT.

11. FOR ASSEMBLY MANUAL REFER TO P/N 33155749.

12. FOR APPLICATION DATA SEE THE INDIVIDUAL APPLICATION DRAWINGS.

DRAWING NUMBER						
33353420						
SIZE	SCALE	FRAME NO	SHEET NO	STG	REV	N/P
A1x5	5:1	2 OF 3	1 OF 2	R	10	-

PART NO	REV	N/P	TYPE	OUTER HOUSING	SEAL RETAINER	SEAL	INNER CONNECTOR	SHUNT	SHIELD CAN 2 PLCS	CPA
33353458	03	AC	105	33353306	33339161	35102769	33280353	13824777	35149967	33125204
33353457	03	AC	104	33353305	33339161	35102769	33280353	13824777	35149967	33125204
33353456	03	AC	103	33353304	33339161	35102769	33280353	13824777	35149967	33125204
33353455	03	AB	102	33353303	33339161	35102769	33280353	13824777	35149967	33125204
33339283	03	AB	101	33339160	33339161	35102769	33280353	13824777	35149967	33125204

DIMENSIONAL RANGE (MM)									CHART E1
FROM TO	> 0 20	> 20 30	> 30 70	> 70 100	>100 150	>150 200	>200 250	>250 300	>300 400
TOLERANCE UNLESS OTHERWISE SPECIFIED									
	±0.15	±0.2	±0.3	±0.4	±0.5	±0.6	±0.8	±1	±1.2
ANGULAR TOLERANCE ±2°									

(N/A) PROCESS SENSITIVE DIMENSION

DIMENSIONS ENCLOSED IN ( ) INDICATE REFERENCE DIMENSIONS AND NO TOLERANCE LIMITS ARE ESTABLISHED

A LINE DRAWN THROUGH A PART NUMBER INDICATES THAT PHYSICAL PARTS ARE NOT AVAILABLE FOR ORDERING.

PART NUMBERS THAT DO NOT HAVE A LINE PRESENT INDICATE THAT PHYSICAL PARTS ARE AVAILABLE FOR ORDERING.

CONTACT APTIV SALES TO ASSURE AVAILABILITY OF PARTS.

DWG TYPE
PART DRAWING

STYLE

VOLUME (CM³)

DISTR CODE
D

UNLESS OTHERWISE SPECIFIED

THIS DOCUMENT IS IN ACCORDANCE WITH ASME Y14.5M-1994 AS AMENDED BY THE GM GLOBAL DIMENSIONING AND TOLERANCING ADDENDUM-2001. SEPARATE PATTERNS OF FEATURES MAY BE GAGED SEPARATELY REGARDLESS OF DATUM REFERENCES.

ALL DIMENSIONS ARE IN MILLIMETERS

REFERENCE
33107361

THIRD ANGLE PROJECTION

DO NOT SCALE

USE MATH DATA

CAD NX

•APTIV•

CONNECTION SYSTEMS
WARREN, OH

COPYRIGHT 2016 APTIV. ALL RIGHTS RESERVED.

THIS DRAWING IS THE PROPERTY OF APTIV AND CONTAINS APTIV CONFIDENTIAL INFORMATION. THE REPRODUCTION, DISTRIBUTION AND UTILIZATION OF THIS DOCUMENT OR ITS RELATED CAD MATH DATA, AS WELL AS COMMUNICATION OF ANY CONTENT TO OTHERS, WITHOUT EXPRESS AUTHORIZATION, IS PROHIBITED.

		DATE
DR		
APVD1	C.MARGRAVE	12MY16
APVD2	C.MARGRAVE	12MY16
APVD3	JAMES NESTOR	12OC17
APVD4		
APVD5		

SUBSTANCES OF CONCERN AND RECYCLED CONTENT PER APTIV 10949001

MATERIAL
SEE DRAWING

DRAWING NAME
TAXI ASM CONN 2 M+F HYBRID
2.8 SLD MODULAR

DRAWING NUMBER						
33353420						
SIZE	SCALE	FRAME NO	SHEET NO	STG	REV	N/P
A1x5	5:1	1 OF 3	1 OF 2	R	10	-

33323450

User: gzgy6n
Part: 33353420-CUS01-S01/10 Date: 21-Jan-20 Time: 08:01:25
gzgy6n,01212020,08:00,481pass,nor